日系卡盤軟爪系列2（C型）

SOFT JAWS FOR JIS STANDARD (TONGUE AND GROOVE TYPE)

C1形 C1TYPE —— C2形 C2TYPE —— C3形 C3TYPE ——

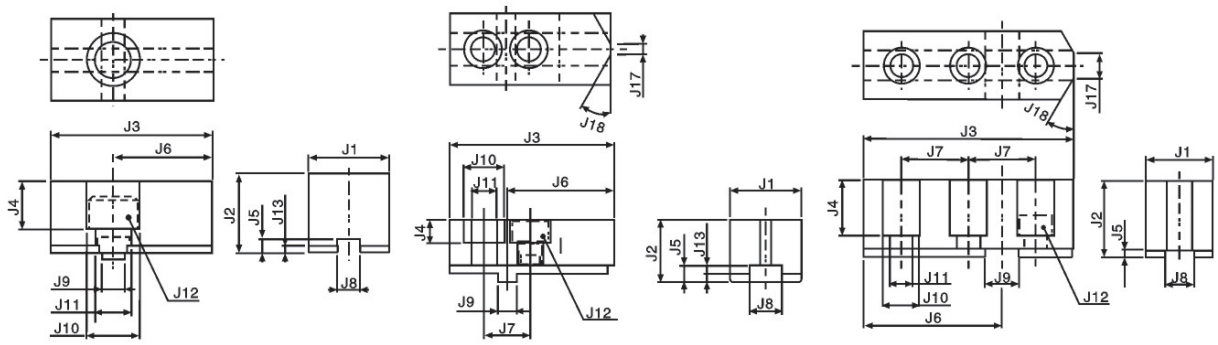

Chuck series number						J1	J2	J3	J4	J5	J6	J7	J8	J9	J10	J11	J12	J13	J17	J18	質量kg (1個) Weight	爪形式 Jaw type
H011MC					4	25	22	50	13	5.5	28	–	8	8	17.5	11	M10	2.5	–	–	0.2	C1
H011MC					5	30	27	56	15	5.5	33	–	8	8	20	13.5	M12	2.5	–	–	0.3	
H011MC		H014M			6	35	34	70	21	6	43	–	10	10	23	15.5	M14	3	–	–	0.5	
			H021MB		6	35	33.5	70	18	7	47	20	14	8	17.5	11	M10	3.5	8	30°	0.5	C2
	H013M			(H055M)	6	35	33.5	70	18	7	47	20	14	8	17.5	11	M10	3.5	(2)	(45°)	0.5	
H011MC	H013M	H014M	H021MB	(H055M)	8	40	44.5	84	29	7	53	26	16	12	20	13.5	M12	3.5	(2)	(45°)	1.0	
H011MC	H013M	H014M	H021MB	(H055M)	10	50	49.5	100	32	7	62	32	18	15	23	15.5	M14	3.5	(2)	(45°)	1.6	
H011MC	H013M		H021MB	(H055M)	12	60	54.5	120	36	7	78	36	20	17	26	17.5	M16	3.5	(2)	(60°)	2.4	
H018M					8	32	36	100	26	3.5	66	32	14	16	17.5	11	M10	–	12	30°	0.8	C3
					10	35	43	110	33	3.5	72	34	16	16	20	13.5	M12	–	12	30°	1.1	
					12	40	50	130	40	3.5	85	40	16	20	20	13.5	M12	–	12	30°	1.9	
					15	40	50	160	40	3.5	107.5	55	16	25	20	13.5	M12	–	12	30°	2.3	

日系卡盤軟爪系列2

H063M/H064M/H3EF 型 SOFT JAWS FOR JIS STANDARD (TYPE H063M/H064M.H3EF)

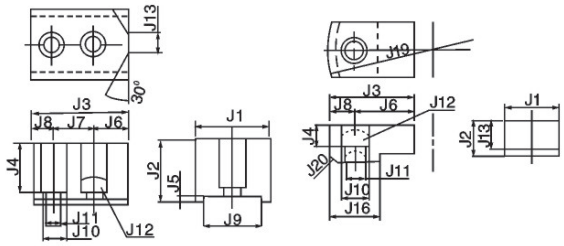

Chuck series number		J1	J2	J3	J4	J5	J6	J7	J8	J9	J10	J11	J12	J13	J16	J19	J20	質量kg Weight
H063M H064M	6	50	44	68	35	4	23.64	29.36	15	38.1	17. 5	11	M10	14	–	–	–	1.0
	8	55	54	83	43.5	4	33.87	34.13	15	44.4	20	13.5	M12	18	–	–	–	1.6
	10	70	64	100	52.5	4	36.55	44.45	19	57 1	26	17.5	M16	40	–	–	–	2.9
	12	70	64	110	52.5	4	46.55	44.45	19	57.1	26	17.5	M16	70	–	–	–	3.2
H3EF	6	32	22	47	12	–	32	–	15	–	17.5	11	M10	17	30	118	C5	0.2
	8	40	27	60	16	–	42	–	18	–	20	13.5	M12	22	35	150	C5	0.4